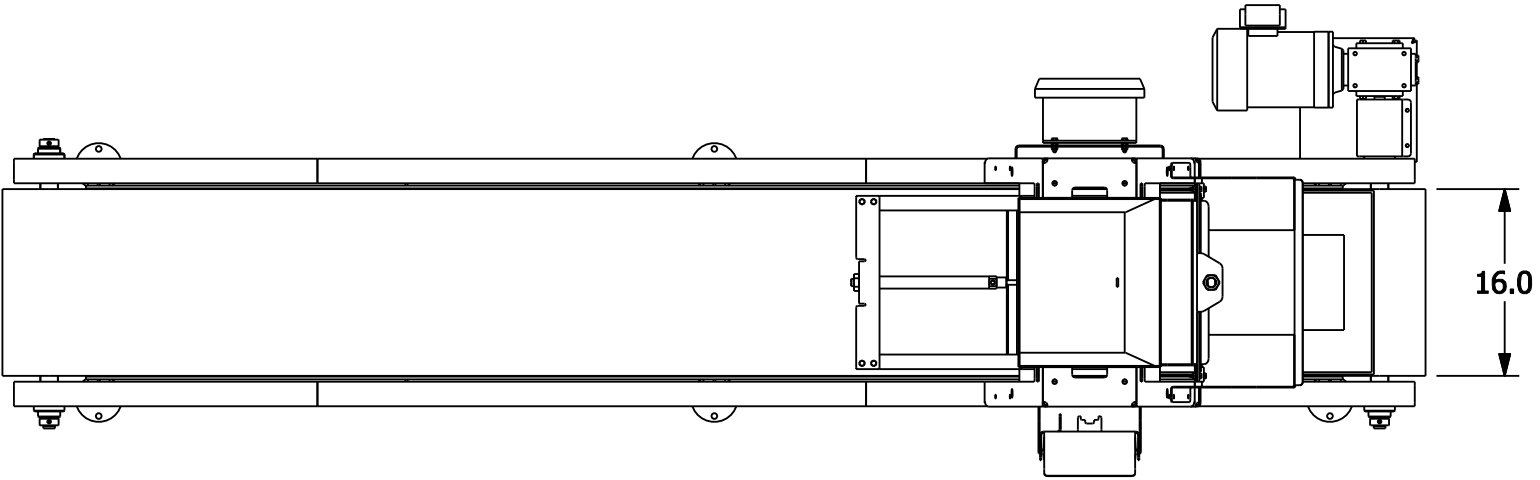
16.0

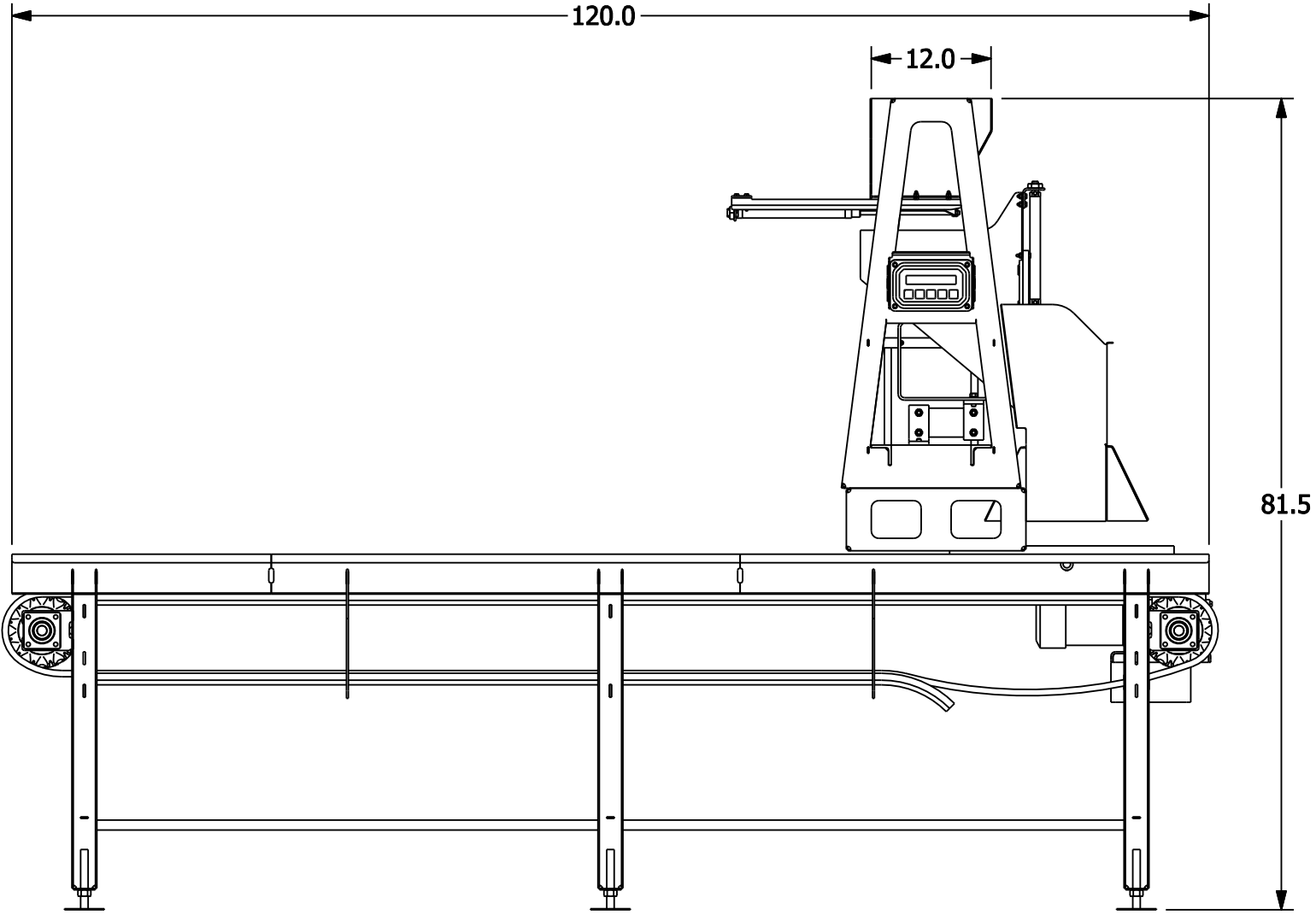
120.0
12.0
81.5

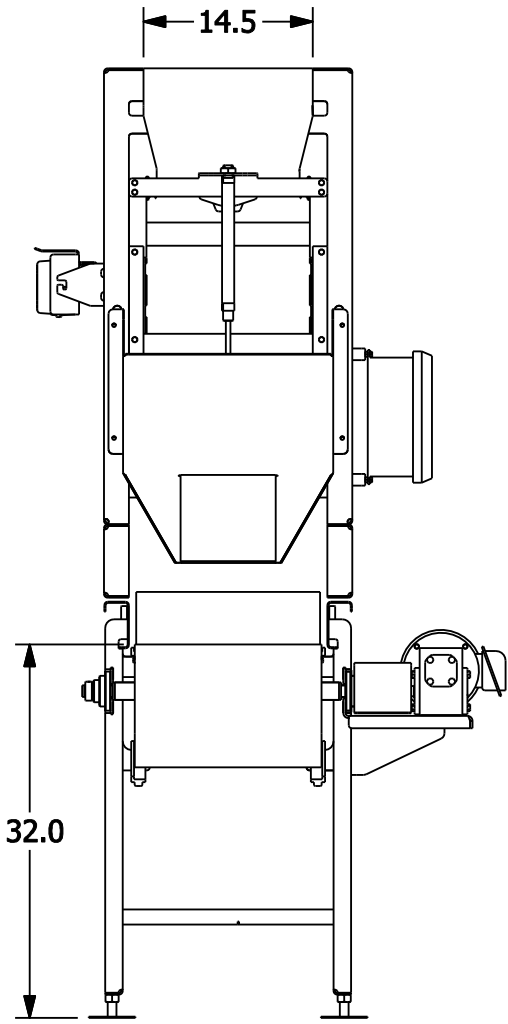
14.5
32.0